ZONE	REV.	REVISION DESCRIPTION	ECN NO.	DATE
	E	ADD CONTACT MATERIAL NOTE; PD	ECN0031487	04-OCT-2006

Property of Sensata Technologies

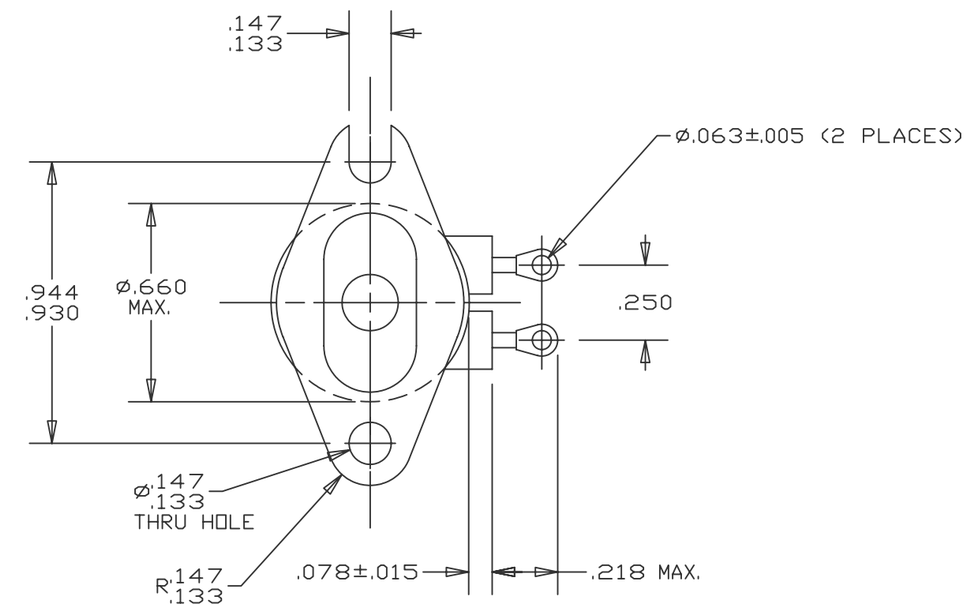

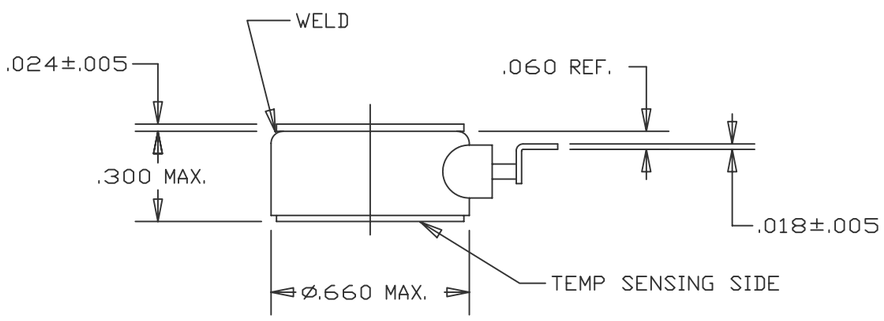

EACH PART NUMBER CONTAINS ELEVEN CHARACTERS WHICH CAN BE DIVIDED INTO FOUR SECTIONS OF SIGNIFICANCE, AND A DASH NUMBER WHICH INDICATES SPECIAL CHARACTERISTICS. THE EXPLANATION BELOW IS FOR GENERAL REFERENCE.

M2S □□□□□□□□ □

L = OPEN ON TEMPERATURE RISE +°F
F = CLOSE ON TEMPERATURE RISE +°F
B = OPEN ON TEMPERATURE RISE -°F
M = CLOSE ON TEMPERATURE RISE -°F

CLOSING TEMPERATURE °F

PLUS AND MINUS TOLERANCE FOR CLOSING TEMPERATURE

DIFFERENTIAL:
05 INDICATE 0° - 5°F DIFF.
09 INDICATE 0° - 9°F DIFF.

THIS IS A DASH NO. WHICH IS ASSIGNED CONSECUTIVELY AS REQUIRED FOR IDENTIFYING NEW VARIATIONS IN PHYSICAL DESIGN AND/OR RATING WHICH ARE IN THE SPECIAL CATEGORY.

NOTE:
CONTACT MATERIAL: GOLD PLATED FINE SILVER

FOR REFERENCE ONLY, CHECK LATEST REVISION BEFORE USE.
PARTS MADE TO THIS PRINT MUST CONFORM TO E9898 REV. E

DRAWN R.BENETIZ DATE 27-FEB-2003
ENGINEER S.MARQUIS DATE 27-FEB-2003
APPROVED D.PETRIE DATE 27-FEB-2003
APPROVED P.BERG DATE 27-FEB-2003

NEITHER THIS PRINT NOR THE INFORMATION CONTAINED HEREON IS TO BE USED AGAINST THE INTERESTS OF SENSATA TECHNOLOGIES, INC. OR AGAINST THE INTERESTS OF ANY OF ITS AFFILIATED COMPANIES OR WHOLLY OWNED SUBSIDIARIES

UNLESS OTHERWISE SPECIFIED
DIMENSIONS ARE IN INCHES
TOLERANCES
DECIMALS ANGLES

THIRD ANGLE PROJECTION
DO NOT SCALE DRAWING
SIZE B

Sensata Technologies
529 PLEASANT STREET
P.O. BOX 2964
ATTLEBORO, MA 02703

TITLE
M2S-96 STYLE THERMOSTAT
SPST AUTO. RESET SEALED
NARROW DIFFERENTIAL
ENVELOPE DRAWING

DWG NO. M2S-96 REV. E

SCALE 1:1 | AUTOCAD | SHEET 1 OF 1

DEVICE:
PROJECT: